PLEASE NOTE: Check that you have received all components and hardware before assembling.
If you are missing any parts fax Euro Style at 415.455.8033 or email: claims@gotoeurostyle.com

Assembly Instructions
SOPHIA Office Chair

Ø5/16" X 3/4"

A (4 pcs)

Ø1/4" X 5/8"

B (9 pcs)

C (4 pcs)

D (9 pcs)

E (4 pcs)

F (9 pcs)

5mm

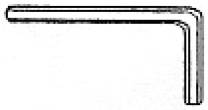

G (1 pc)

4mm

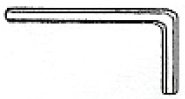

H (1 pc)

1

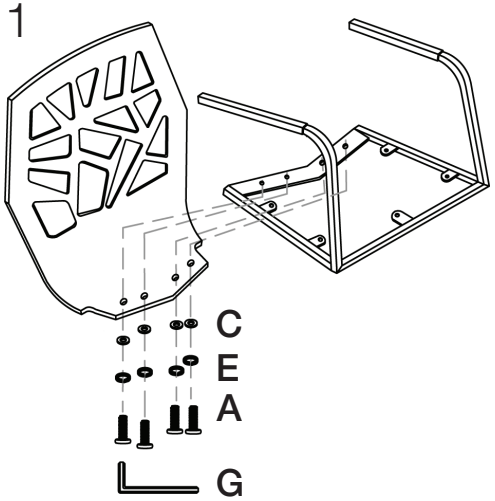

2

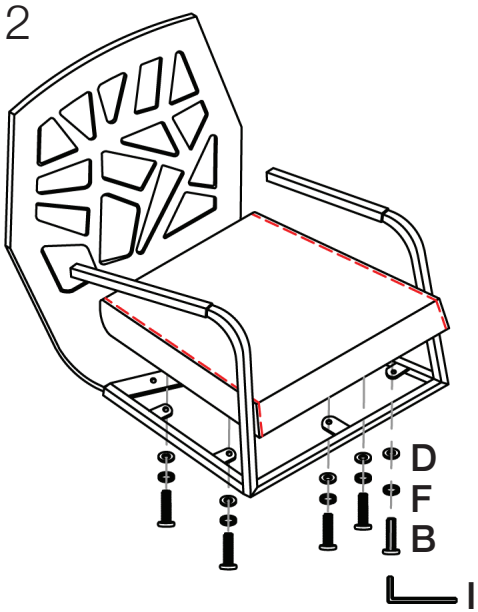

3

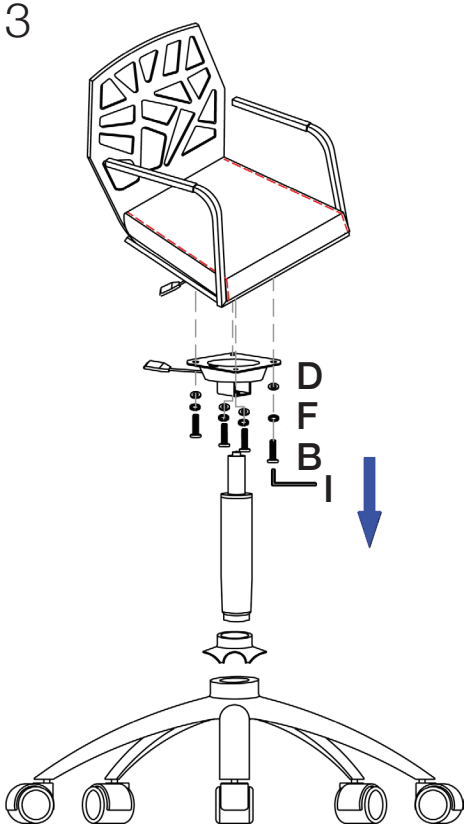

During assembly, hand tighten screws only. When all screws are in place, then tighten completely.

Revised 06.07.13 cy