Assembly Instructions
SAVANNAH Sideboard

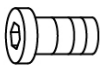

A (16 pcs)
M8 x 15mm

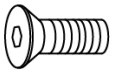

B (8 pcs)
M8 x 15mm

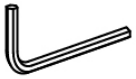

C (1 pc)
5mm

11.25.14 cy

PLEASE NOTE: Check that you have received all components and hardware before assembling.
If you are missing any parts fax Euro Style at 415.455.8033 or email: claims@gotoeurostyle.com

1

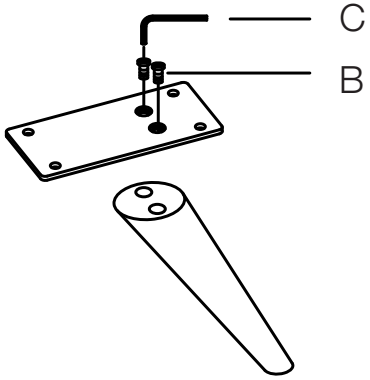

2

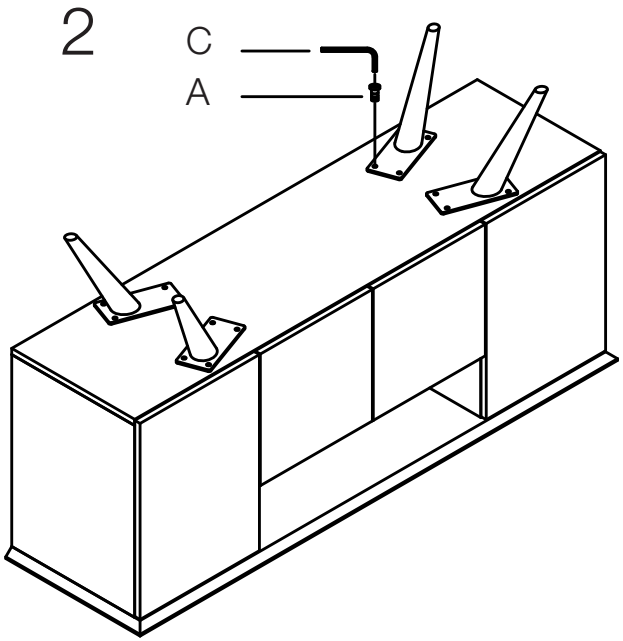

During assembly, hand tighten screws only. When the screws are in place, tighten completely.